TCL SOLAR

T Class Solar Panel



Product: HSM-ND54-DR

485–510 W | Up to 22.9% efficient

Ideal for residential and commercial applications

Framed glass-glass

Bifacial energy generation

High energy yield

- Consistent energy production across all weather conditions
- Bifacial energy generation

Elegant design

- Sleek panel aesthetic
- High-durability frame and heat-strengthened glass

Reliable operation

- Rigorous supply chain qualification procedures
- Easy to install
- Backed by a bankable company

Comprehensive warranty coverage

Product and power coverage	25-30 Years
Year 1 minimum warranted output	99.0%
Maximum annual degradation	0.40%

T CLASS POWER: 485–510 W | EFFICIENCY: Up to 22.9%

Electrical Data, Front STC Characteristics[1]						
	HSM-ND54-DR510	HSM-ND54-DR505	HSM-ND54-DR500	HSM-ND54-DR495	HSM-ND54-DR490	HSM-ND54-DR485
Nominal Power (Pnom)[2]	510 W	505 W	500 W	495 W	490 W	485 W
Power Binning	3/0%	3/0%	3/0%	3/0%	3/0%	3/0%
Panel Efficiency	22.9%	22.7%	22.5%	22.3%	22.0%	21.8%
Rated Voltage (Vmpp)	34.10 V	33.90 V	33.70 V	33.50 V	33.30 V	33.10 V
Rated Current (Impp)	14.96 A	14.90 A	14.84 A	14.78 A	14.72 A	14.66 A
Open-Circuit Voltage (Voc)[2]	40.36 V	40.14 V	39.92 V	39.70 V	39.50 V	39.34 V
Short-Circuit Current (Isc)[2]	15.95 A	15.88 A	15.81 A	15.74 A	15.67 A	15.60 A

BNPI Data[3]						
Nominal Power (Pmax)[2]	558 W	553 W	548 W	543 W	537 W	532 W
Open-Circuit Voltage (Voc)[2]	40.54 V	40.34 V	40.13 V	39.93 V	39.71 V	39.56 V
Short-Circuit Current (Isc)[2]	17.38 A	17.31 A	17.24 A	17.17 A	17.08 A	17.02 A

Bifacial Gain[4]						
Pmax with 5% Bifacial Gain	536 W	530 W	525 W	520 W	515 W	509 W
Isc with 5% Bifacial Gain	16.75 A	16.67 A	16.60 A	16.53 A	16.45 A	16.38 A
Pmax with 10% Bifacial Gain	561 W	556 W	550 W	545 W	539 W	534 W
Isc with 10% Bifacial Gain	17.55 A	17.47 A	17.39 A	17.31 A	17.24 A	17.16 A

Electrical Data	
Bifaciality (ϕPmax/ϕIsc)	80% +/–5%
Bifaciality (ϕVoc)	98% +/–2%
Maximum System Voltage	1500 V IEC
Testing Temperature	–40°C to +85°C
Operation Temperature	–40°C to +70°C (IEC TS 63126)
Maximum Series Fuse	30 A
Power Temp. Coef.	–0.29% / °C
Voltage Temp. Coef.	–0.25% / °C
Current Temp. Coef.	0.045% / °C

Packaging Configuration	
Number of modules per pallet	36
Number of pallets per 40ft HQ container	24
Number of modules per container	864

Tests And Certifications	
Standard Tests	IEC 61215, IEC 61730
Fire Rating	Class A (IEC 61730-2 / UL 790)
Protection Class	Class II (IEC 61140)
Quality Certs	ISO 9001:2015, ISO 14001:2015
EHS Compliance	ISO 45001-2018, Recycling Scheme

Mechanical Data	
Solar Cells	N-Type TOPCon
Glass	2.0 mm + 2.0 mm, high transmission heat strengthened glass, AR coating on front glass
Junction Box	IP-68, 3 bypass diodes
Connector	Stäubli MC4-EVO2A
Weight	27 kg
Max. Load[5]	Wind: 2400 Pa, 245 kg/m² front & back Snow: 5400 Pa, 550 kg/m² front
Impact Resistance	25 mm diameter hail at 23 m/s
Frame	Black Anodized Aluminum Alloy

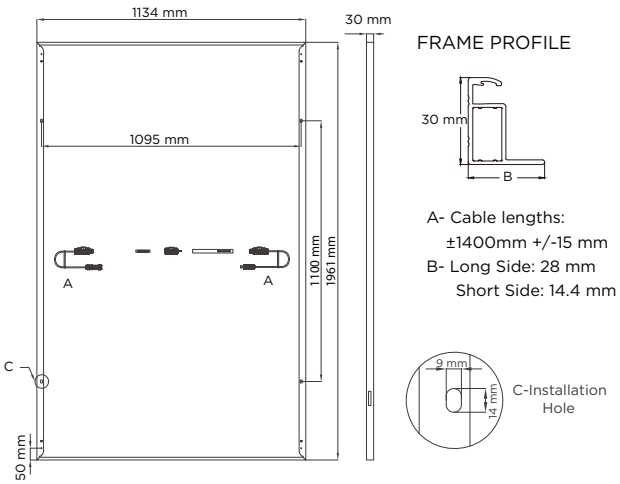

Please read the safety and installation instructions.
Visit www.sunpowerglobal.com/PVInstallGuide.
Paper version can be requested through
techsupport.EN@sunpowerglobal.com

1 Standard Test Conditions (1000 W/m² irradiance, AM 1.5, 25° C). NREL calibration Standard: SOMS current, LACCS FF and Voltage.
2 Measurements tolerance +/-3%.
3 BNPI Test Condition (front 1000 W/m², rear 135W/m² irradiance, AM 1.5, 25° C).
4 The additional gain from the back side of the panel compared to the power of the front side of the panel at the standard test conditions. It depends on mounting (structure, height, tilt angle etc.) and albedo of the underlying surface.
5 Test load as per IEC 61215-2 is equal to design load with safety factor = 1.5. See "Safety and Installation Instructions" for details.

TCL SOLAR

Specifications included in this datasheet are subject to change without notice.
©2025 TCL SunPower Global. All Rights Reserved.

554570 REV A / A4_EN
Publication Date: September 2025