SunPower
Origin Essential
Home solar panel

Product: SPR-BE54-DD
480–505 W | Up to **24.7 %** efficient



- Ideal for residential applications
- Unique back-contact shingled cell technology
- Elegant & durable full-black framed glass-glass
- Certified to withstand harshest real-life conditions

Abundant

Leading back contact technology

Maximized output – more energy from limited roof space

Optimized for low light conditions and partial shading

Dependable

Industry`s lowest degradation rate

Designed to withstand micro-crack, soiling, heat, wind and hail

Warrantied long-lasting performance, for decades

Trusted

Built on 40+ years of SunPower patented innovation

Manufactured by a leading global solar provider

Proven high-quality, durable, and reliable performance

40-years service warranty coverage

HOTSPOT PROTECTED

40 YEAR WARRANTY
Power | Product | Service

Backed by best-in-class 40-year warranty

Product, power, service coverage	40 Years
Year 1 minimum warranted output	99.0 %
Maximum annual degradation	0.25 %

SUNPOWER

BloombergNEF TIER 1 PV Modules

SOLAR STEWARDSHIP INITIATIVE

Learn more about SunPower panels
www.sunpowerglobal.com

Origin Essential solar panel | SPR-BE54-DD | Power: 480–505 W | Efficiency: up to 24.7 %

Electrical Data, Front STC Charactsristics[1]						
	SPR-BE54-DD480	SPR-BE54-DD485	SPR-BE54-DD490	SPR-BE54-DD495	SPR-BE54-DD500	SPR-BE54-DD505
Nominal Power (Pmax)[2]	480 W	485 W	490 W	495 W	500 W	505 W
Power Binning	+3/0 %	+3/0 %	+3/0 %	+3/0 %	+3/0 %	+3/0 %
Panel Efficiency	23.85 %	23.8 %	24.0 %	24.3 %	24.5 %	24.7 %
Rated Voltage (Vmpp)	33.52 V	33.64 V	33.75 V	33.86 V	33.97 V	34.08 V
Rated Current (Impp)	14.32 A	14.42 A	14.52 A	14.62 A	14.72 A	14.82 A
Open-Circuit Voltage (Voc)[2]	40.33 V	40.45 V	40.56 V	40.66 V	40.77 V	40.88 V
Short-Circuit Current (Isc)[2]	15.08 A	15.18 A	15.28 A	15.38 A	15.48 A	15.58 A

BNPI Data[3]						
Nominal Power (Pmax)[3]	525 W	530 W	535 W	540 W	545 W	550 W
Open-Circuit Voltage (Voc)[3]	40.33 V	40.45 V	40.56 V	40.66 V	40.77 V	40.88 V
Short-Circuit Current (Isc)[3]	16.51 A	16.61 A	16.72 A	16.83 A	16.94 A	17.05 A

Bifcial Gain[4]						
Pmax with 5 % Bifacial Gain	497 W	502 W	507 W	512 W	518 W	523 W
Isc with 5 % Bifacial Gain	15.16 A	15.71 A	15.81 A	15.92 A	16.02 A	16.13 A
Pmax with 10 % Bifacial Gain	510 W	519 W	524 W	530 W	535 W	540 W
Isc with 10 % Bifacial Gain	16.14 A	16.24 A	16.35 A	16.46 A	16.56 A	16.67 A

Electrical Data	
Maximum System Voltage	1500 V IEC
Maximum Series Fuse	30 A
Bifaciliality	70 ±5 %
Nominal Module Operating Temp.	42 °C ±2 °C
Operation Temperature	–40 °C to +70 °C (IEC TS 63126)
Power Temp. Coefficient	–0.26 %/°C
Voltage Temp. Coefficient	–0.22 %/°C
Current Temp. Coefficient	0.05 %/°C

Packaging Configuration	
Number of modules per pallet	36
Number of pallets per 40ft HQ container	26
Number of modules per container	936

Tests and Certifications	
Standard Tests	IEC 61215, IEC 61730
Fire Rating	Class C (IEC 61730-2 / UL 790)
Protection Class	Class II (IEC 61140)
Quality Certs	ISO 9001:2015, ISO 14001:2015
EHS Compliance	ISO 45001:2018, ISO 50001:2018, Recycling Scheme
Ammonia Test	IEC 62716
Dust and Sand	IEC 60068-2-68
Salt Mist	IEC 61701 (TM 6)

Mechanical Data	
Solar Cells	N-Type Back Contact
Glass	2+2 mm semi tempered Glass Anti Reflective coating on front glass Black tint on back glass
Junction Box	IP-68, 3 bypass diodes
Connector	Stäubli MC4-EVO2A
Weight	26.0 kg
Max.Load[5] Front & Back	Wind: 2400 Pa, 245 kg/m² Front & Back Snow: 5400 Pa, 550 kg/m² Front
Impact Resistance	40 mm diameter hail at 27.5 m/s
Frame	Black anodized aluminum alloy

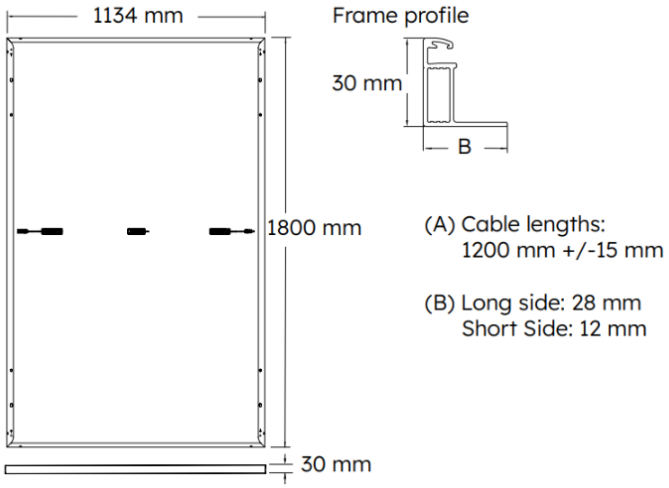

Please read the safety and installation instructions
Visit www.sunpowerglobal.com/PVInstallGuide
Paper version can be requested through
techsuport.EN@sunpowerglobal.com

1 Standard Test Conditions (1000 W/m² irradiance, AM 1.5, 25 °C). NPEL calibration Standard: SOMS current, LACCS II and Voltage.
2 Measurements tolerance ±3 %.
3 BNPI Test Condition (front 1000 W/m², rear 135W/m2 irradiance, AM 1.5, 25° C).
4 The additional gain from the back side or the panel compared to the power or the front side or the panel at the standard test conditions. It depends on mounting (structure, height, tilt angle etc.) and albedo or the underlying surface.
5 Test load as per IEC 61215-2 is equal to design load with safety factor = 1.5. See "Safety and Installation Instructions" for details.

Publication: September 2026
Version: A

Specifications included in this datasheet are subject to changs without notice.
©2026 TCL SunPower Global. All Rights Reserved.

SUNPOWER