Manuals+ — User Manuals Simplified.



TW SOLAR TWMNH-66HD-620W Monocrystalline Bifacial Solar Module Installation Guide

Contents

1 TW SOLAR TWMNH-66HD-620W Monocrystalline Bifacial Solar Module
2 SAFETY & TRANSPORT
3 Module Carry and Installation Instruction
4 Description of Package Signs
5 Unloading, Transportation and Storage
6 MECHANICAL INSTALLATION
7 Installation requirements
8 Framed Modules
9 Table 2 Installation method and load capacity
10 ELECTRICAL INSTALLATION
11 GROUNDING
12 MAINTENANCE
13 Documents / Resources
13.1 References
14 Related Posts

TW SOLAR TWMNH-66HD-620W Monocrystalline Bifacial Solar Module



Bifacial Module
With ½ cut of 182*182 mono Topcon-c-Si cell– double glass module:

- TWMND-78HD625
- TWMND-78HD630
- TWMND-78HD635

With ½ cut of 210*210 mono HJT-c-Si cell– double glass module:

- TWMHF-66HD695
- TWMHF-66HD700
- TWMHF-66HD705
- TWMHF-66HD710
- TWMHF-66HD715
- TWMHF-66HD720

With ½ cut of 182*192 mono Topcon-c-Si cell– double glass module:

- TWMNG-54HD450
- TWMNG-54HD455
- TWMNG-54HD460
- TWMNG-54HD465
- TWMNG-54HC450
- TWMNG-54HC455
- TWMNG-54HC460

With ½ cut of 182*210 mono Topcon-c-Si cell– double glass module:

- TWMNH-66HD600
- TWMNH-66HD605
- TWMNH-66HD610
- TWMNH-66HD615
- TWMNH-66HD620
- TWMNH-48HD435
- TWMNH-48HD440
- TWMNH-48HD445
- TWMNH-48HD450
- TWMNH-48HC435
- TWMNH-48HC440
- TWMNH-48HC445
- TWMNH-48HC450

The modules mentioned in this installation manual are only allowed to be installed below 2000m above sea level.



Meaning of crossed-out wheeled dustbin: Do not dispose of electrical appliances as unsorted municipal waste, use separate collection facilities. Contact your local government for information regarding the collection systems available.
If electrical appliances are disposed of in landfills or dumps, hazardous substances can leak into the groundwater and get into the food chain, damaging your health and well-being. When replacing old appliances with new ones, the retailer is legally obligated to take back your old appliance for disposals at least free of charge.

PURPOSE OF THIS MANUAL

- This manual applies exclusively to the bifacial module (here in after referred to as Module) of TW solar energy Co., Ltd (here in after referred to as TW). The contents of this manual involve the installation methods, operation safety and maintenance information of TW's Modules.
- Modules must be installed by professionals. Please read this manual carefully before installation. The installers must follow all the rules in this manual strictly as well as local requirements and regulations by law or authorized organizations.
- Before installing, the installer must be familiar with their mechanical and electrical requirements. Please keep this manual in a safe place for future reference (care and maintenance) and in case of sale or disposal of the Modules.

DISCLAIMER

- TW shall not be responsible for any loss arising from the installation, operation, use or maintenance of the Modules which is not complying with the guidance of this manual, including breakdown or damage of the Modules or any other expenses incurred.
- Any customer shall not get any patent or authorization of the patent when using the Modules, expressed or implied. Any infringement of patents or other rights of the third party, which may result from the use of the Module, is not within the responsibility scope of TW. The information in this manual is based on TW's knowledge and experience and is believed to be reliable, but such information including product specification (without limitation) and relevant suggestions do not constitute a warranty, expressed or implied.
- TW reserves the rights to change the manual, the Modules, the specifications or any other information of the Modules without prior notice.

SAFETY & TRANSPORT

General Detailed Rules

- Keep all the Modules and electrical connectors clean and dry before installation.
- Use both hands to carry Modules. Do not overlap Modules.
- Be cautious when carrying Modules. Slip-proof gloves are necessary.
- Use supportive disassembling tools when unpacking.
- The application level of TW module is Class A, which can be used in systems operating at greater than 50 V DC or 240W, where general contact access is anticipated;
-  Do not stamp on Modules or put weight on Modules.
-  Do not disassemble or drop Modules. Do not remove any nameplate or component of the module.
-  Do not use mirrors or magnifiers to concentrate sunlight onto Modules.
-  Do not lift the module by grasping the junction box or cable wire.
-  Do not use any sharp object with Modules.
-  Do not directly apply pressure on the glass surface or backsheet of Modules.
-  Do not touch the surface of the coated glass with bare hands.
-  Ensure all contacts and the operating environment are clean and dry.

Module Carry and Installation Instruction

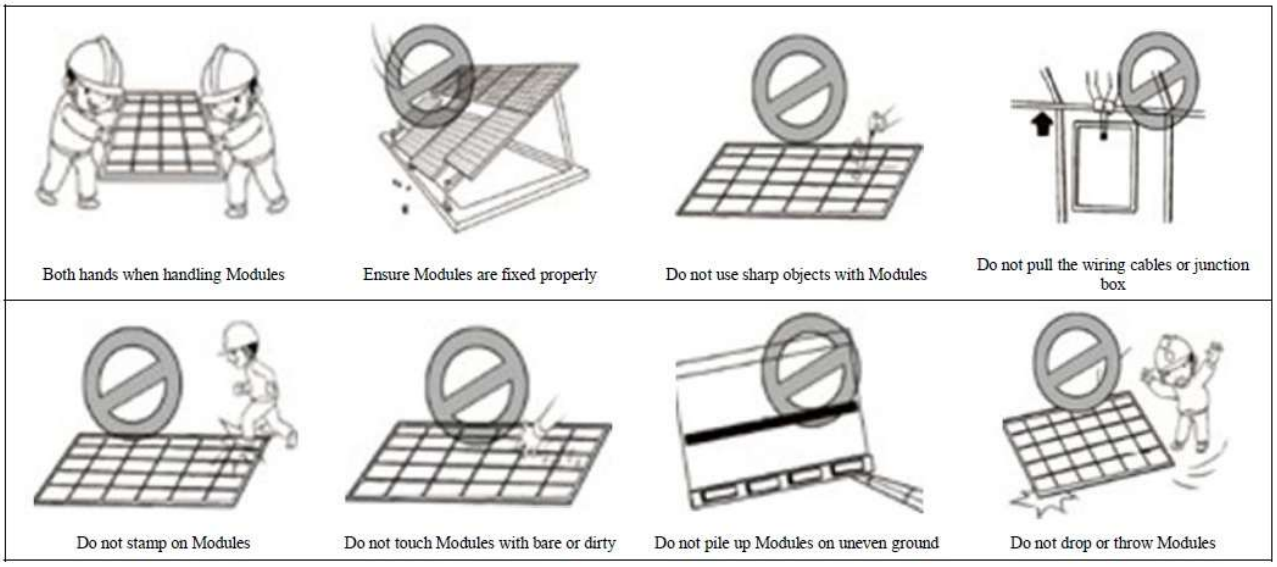

Electrical Performance Safety

- PV modules can produce DC current under sunlight. Any contact of exposed metal at module's wiring parts may result in electrical shock or burn. Any contact of 30V or larger DC Voltage can be fatal.
- In case of no connected load or external circuits, modules can still produce voltage. Please use insulation tools and wear rubber gloves when operating modules in the sunlight.
- No switch is on the PV modules. Operating of PV modules can only be stopped when they are kept from sunlight or covered by hard board or UV-proof materials or when the angle of the modules facing sun are placed on smooth and flat surfaces.
- To avoid electric arc or electric shock hazards, please do not break down electric connection in loaded conditions. Incorrect connections will also lead to electric arc or shock. Keep connectors dry and clean and make sure that they are in good operating condition. Do not insert other metals into the connectors or carry out electric connection by whatever means.
- Snow, water or other reflective medium in surrounding environments that intensify light reflection will increase output current and power. And module voltage and power will increase under low temperature condition.
- If module glass or other sealing materials are damaged, please wear personal protective equipment and then isolate modules from the circuit.
- Work only under dry conditions and use only dry tools. Do not operate when modules are wet unless you wear personal protective equipment. Please follow the cleaning requirements in this manual when cleaning modules.
- Installation must be carried out under the guidance of a qualified electrician.
- No matter how weather condition is, personnel entering the power station shall wear safety helmet, insulating gloves and insulating shoes correctly, taking-safety protection measures.

Description of Package Signs

Before the operation, it is necessary to read carefully the unpacking instruction and outer packing box instruction, and carry out the operation as instructed.

1. DO NOT expose the module to rain or moisture.



2. The Modules in the carton box are fragile. Handle with care.



3. The package shall never be upside down during the transportation.

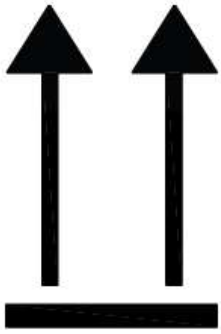

4. It is prohibited to tramp on the packing box and module.

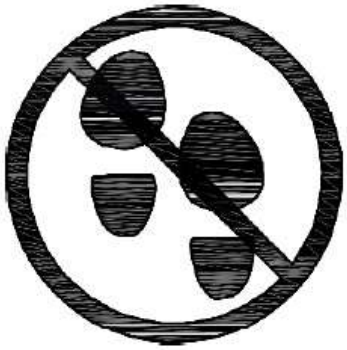

5. During the stacking of the Modules, the outer packing box can be stacked not exceed the maximum layer allowed .(n=2 means it is allowed to stack for at most two layers.)

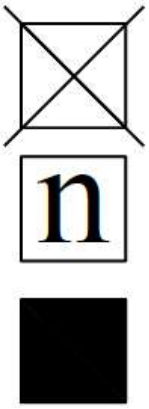

6. One module shall be handled by two people together.

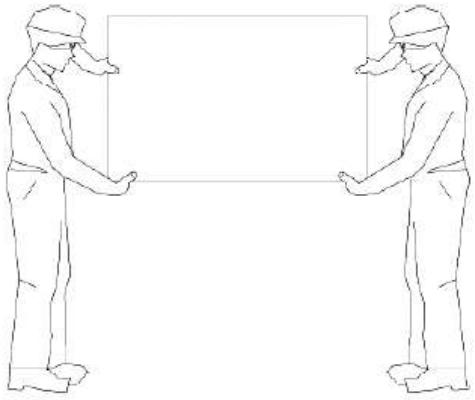

Unloading, Transportation and Storage

- When the Modules are delivered to the project site, the freight car shall be ready in the flat, even and open area for parking and unloading.
- Forklift unloading: Choose the appropriate carrying forklift according to the commodity weight, unload the Modules from the freight car and place them on flat ground.
- Unloading with a crane: Affix the lifting belt in the wood supporting frame buckle (Fig. 1, 2). It is allowed only to lift one pallet at a time. Before lifting, it is necessary to confirm whether the pallet and paper box are damaged and ensure that the lifting rope is robust and firm. When being lifted close to the ground, the paper box will be gently placed in a relatively flat position on the project site by two people, one on each side.



Figure 1 Wood Supporting Frame

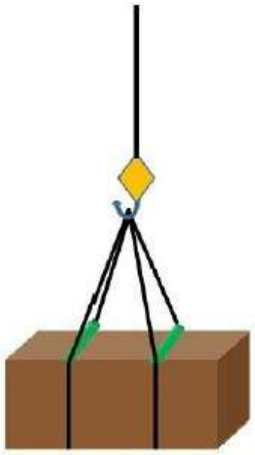

Figure 2 Lifting Schematics

- It is prohibited to stack the Modules in the project site.
- During the transportation at the project site, the Modules shall not be stacked, but only allowing for one layer in transportation.
- Storage in the project site warehouse:
  Storage environment requirements: Humidity 85%, temperature -20 ~+50°C; Modules statically stacked for ≤2 layers.
- Temporary storage at the project site: The Modules shall be stored in a dry, well-ventilated place. They shall not be stacked but shall be covered with waterproof cloth to prevent dampness in the Modules.

Unpacking description

1. In the outdoor unpacking process, it is prohibited to operate in rainy conditions;
2. If there is wind in the field, special attention shall be paid. Particularly in the event of heavy wind, it is recommended not to handle the module, and it is necessary to properly secure the unpacked Modules;
3. The working surface shall be such that the packing box can be placed in a stable, level position, avoiding being overturned;
4. During the unpacking, it is necessary to wear protective gloves, and avoid scratching the hands and leaving the fingerprints on the glass;
5. In the case of operation not according to the requirements or in the case of an unskillful operation, it will result in the fall-off of the protective corner in small amounts, which will be normal. The effect of the protective corner is to reduce damage due to external force during transport, and the fall-off of the protective corner will not influence the reliability of the Modules;
6. Before the unpacking, it is necessary to carefully check the product information on the carton box, and carefully read the unpacking instruction;
7. Every module shall be carried by two people. When carrying the module by two people, it is prohibited to pull the junction box.

MECHANICAL INSTALLATION

Location Selection

- Select suitable places to install Modules. The module in the north latitude region shall face south, and shall face north in the south latitude region.
- Install Modules at the places with sufficient sunlight and without shade at any time. If a module is shaded or even partially shaded, it will result in lower power output. A permanent or regular shade will cause module damage, which will result in the invalidity of product's limited warranty.
- Do not store, install or use Modules at the places where combustible gas is easily generated or gathering.
- The straight-line distance between the installation site and coastline shall not be shorter than 1 km unless there is a writ ten approval from TW or an engagement specified in the contract.

Location Selection

- Modules in the same string should be installed at the same angle. Modules installed in different angles will receive different irradiation, which will cause current different. As a result, it will decrease the operation efficiency of the system.

Installation requirements

- The installation structure shall be made of the durable corrosion-resistant and ultraviolet-resistant materials. It is necessary to ensure that the support and structure in use have been tested, certified and approved.
- No matter where the Modules are installed, it is necessary to ensure that the module is firmly mounted on the support, and ensure that it can undertake the corresponding wind loading and snow loading.
- Choose proper installation height of the photovoltaic support system, the lower part of the module should not be covered with snow for a long time in winter. Additionally, it is necessary to ensure that the lowest part of the module is high enough, to avoid being shaded by the plant or damaged by the flying sand.
- For the photovoltaic system installed on the ground, TW recommends that the minimum distance from the module bottom to the ground surface shall be 24 inches (60cm). The higher the lower point of the module from the ground, the higher the power generation efficiency on the back of the module. When the module is installed on the roof, it is necessary to ensure that the roof structure is suitable and the installed module shall not be beyond the roof zone. Additionally, the roof shall have water-proof treatment to prevent the roof from water leakage.
- If the module will be installed on the column, the chosen column and the module support structure shall be able to undertake the locally expected loads of wind and snow. Ensure that such loads are within the range of the respective maximums loading permitted by TW, meanwhile, the module will not be subjected to the thermal expansion force from the support structure. The stacking of Modules shall be prohibited.
- The back of the module shall be well ventilated to facilitate the cooling of the module. TW recommends that there shall be the gap of 30cm between the module and the installation surface, if the surface is finished with the light-color and highly reflective materials such as white paint and aluminum foil, the back of the module could contribute 5%-30% additional power output.
- To prevent the influence of thermal expansion between the Modules upon the module, TW recommends that the minimum distance between two Modules shall not be less than 10mm, which is the minimum linear distance between two Modules.
- It is necessary to always observe the instruction guide and safety rules attached for module installation.
- It is prohibited to drill the holes in the glass surface. Otherwise, it will invalidate the quality guarantee.

Framed Modules

Installation with the mounting clamp

Table 1 Installation Method		
	Installation Method A	Installation Method B
Clamping on the long side	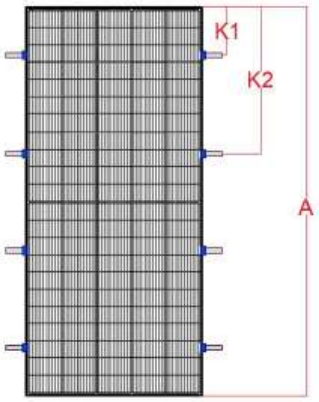	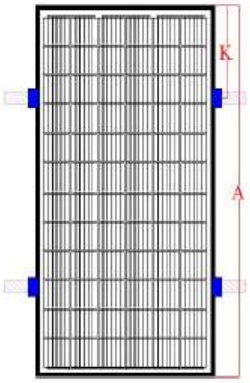

Note: The length of the clamp≥50mm.

Table 2 Installation method and load capacity

Installation method		Installation method A			Installation method B	
Modules model	Modules size (mm)	Mounting clamp position K1 (mm)	Mounting clamp position K2 (mm)	Design load: front/back, γm =1.5 Pa	Mounting clamp position K1 (mm)	Design load: front/back, γm =1.5 Pa
TWMND-78HD625						
TWMND-78HD630	2465*1134*30			3600/1600		3600/1600
TWMND-78HD635						
TWMHF-66HD695 TWMHF-66HD700		A/8±50	3A/8±50			
TWMHF-66HD705 TWMHF-66HD710	2384*1303*35			3600/1600		3600/1600

TWMHF-66HD715						
TWMHF-66HD720						
TWMNG-54HD450						
TWMNG-54HD455						
TWMNG-54HD460						
TWMNG-54HD465	1800*1134*30	/	/	/		3600/1600
TWMNG-54HC450						
TWMNG-54HC455 TWMNG-54HC460					A/4±50	
TWMNH-48HD435						
TWMNH-48HD440						
TWMNH-48HD445						
TWMNH-48HD450 TWMNH-48HC435	1762*1134*30	/	/	/		3600/1600
TWMNH-48HC440						
TWMNH-48HC445						
TWMNH-48HC450						
TWMNH-66HD600						
TWMNH-66HD605						
TWMNH-66HD610	2382*1134*30	/	/	/		3600/1600
TWMNH-66HD615						
TWMNH-66HD620						

Note: Test load = γm(safety factors) × design load

The Modules may be installed and fixed with the following methods:

- Clamping system: use proper clamp, and fix the module with the installation support, as shown in Fig. 3.

The clamp must maintain an overlap of unless 8 mm with the frame of the module(you can change the cross section of the clamp if the module is securely installed). The applied value of torque should refer to mechanical design standard and the bolt type customer is using, for example: M8: 16-20 N•m.

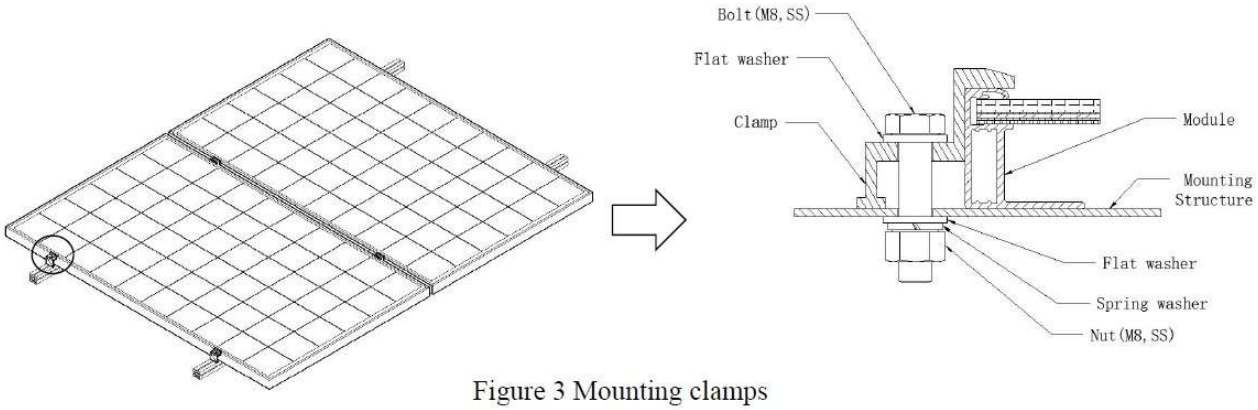

Figure 3 Mounting clamps

ELECTRICAL INSTALLATION

DC power generated by the photovoltaic system can be converted into AC power and fed into the grid. Policies on connecting renewable energy system to the grid vary from region to region. Consult senior system designer before designing the system. Generally, the system installation shall be formally approved by the local public sector.

General Installation

- Installation structure should be compatible with module, in order to avoid galvanic corrosion. Any defects caused by such corrosion will void the warranty.
- The DC-side system potential of the photovoltaic array includes the practice of floating ground, positive-pole grounding and negative-pole grounding according to the system requirements; and different cell technologies have different adaptability. In a power-station project, particularly the module of the crystalline silicon photovoltaic cells, too large an absolute value of the negative to the ground might cause potential induced degradation (PID). Consequently, it is appropriate to use the negative grounding system so that the potential of the circuit is positive. Consult the inverter manufacturer for details.
- It is forbidden for non-professionals to open the lock nuts of the connector. Make sure that the connectors are clean, dry and fully connected.
  (A click sound should be heard when fully connected), otherwise it may lead to electric arc sparks which will damage the connector or cause a fire.
- Under normal conditions, a module is likely to experience conditions that produce more current and/or voltage than reported at standard test conditions, Accordingly, the values of ISC and VOC marked on the Module should be multiplied by a factor of 1.3 when to determining component voltage ratings, current ratings, fuse sizes, and size of controls connected to the PV output.
- Completely cover the Modules with an opaque material to prevent electricity from being generated during disassembling the conductors.

- It is not allowed to use the Modules in different models in the same solar photovoltaic system. When the Modules are connected in series, the voltage of every string shall not be higher than the maximum voltage of the system (as shown in Figure 4). Reference equation of the maximum number of the Modules in serial connection: maximum system voltage of the module/ (1.3* open-circuit voltage).
- When connected in parallel, the current output is equal to the sum of each string's current (as shown in Figure 5). Fuse is necessary for each module string. Take reference to the local regulation. Recommended maximum parallel Modules configurations: Fuse rating/(1.3* short-circuit current).

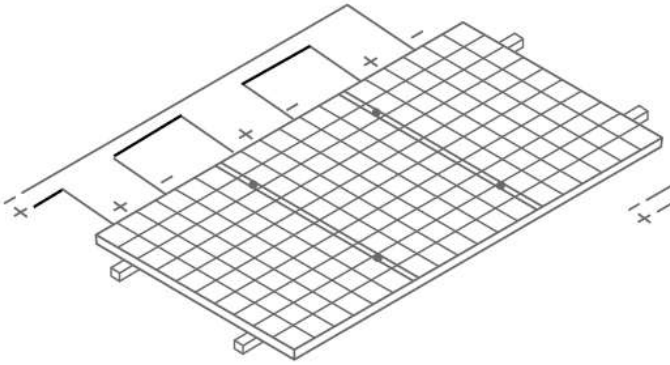

Figure 4 Connection in Series

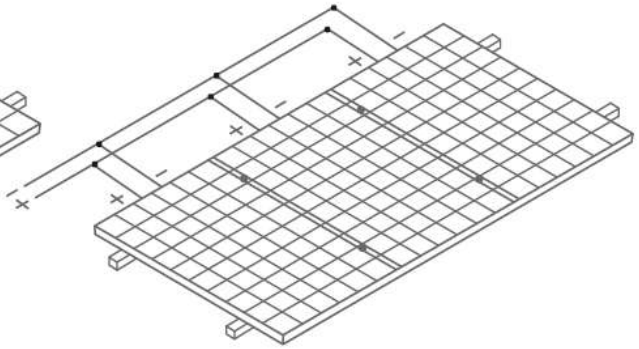

Figure 5 Connection in parallel

- Refer to the local regulations to determine the system wire size, types and temperatures.
- The cross section of the cables and the capacity of the connectors must be selected to suit the maximum system short circuit current (The recommended section area for a single piece of Module is 4 mm2, and the recommended rated current for the connector is greater than 20A), otherwise the cables and connectors shall be overheated under large current.

Caution: The maximal temperature of the cable is 85 °C while the upper limited temperature of the connector is 105°C.

- Make sure the electric components such as the connectors and inverters are off-state during the installation. To reduce lightning damage, the loop area should be kept as small as possible when laying cables. It is recommended to use fuses in each string.

GROUNDING

Grounding by cable

- The grounding bolts must be made of stainless steel and be used in the specified grounding holes. First, make the M3. 5 stainless steel bolt pass through the spring washer, flat washer, cup washer (copper conductor with a diameter of 2.1 mm) and star washer, and then insert through the grounding hole, flat washer and spring washer on the frame. Finally, tighten with a M3.5 nut. Caution: The upper limited temperature of the conductor is 85°C. As for the installation, refer to Figure 6.

Grounding by lugs

- All the module frames and mounting structures shall be grounded according to regional and national electricity

regulations. Use recommended hardware to connect grounding cables and fasten to the Module frames.

- While using the metal structure, make sure the surface of the system have been electroplated to keep a good conducting circuit.
- Use suitable grounding conductors to connect the Module frame to the mounting structure. This can achieve proper grounding effects.
- The grounding conductor must be connected to ground via an appropriate grounding electrode. It is recommended to use lugs to connect the grounding cables. If it is only mechanically connected to a grounded module without bolts and nuts, the mounting system should be grounded as well.
- First, peel the grounding cable to a proper length without damage to the metal core. Then insert the peeled cable into the lug, tighten the screw. As shown in Figure 7, connect the lug to the aluminum frame with stainless steel bolts and connection components. The recommended tightening torque for M3 bolts is 2.3N•m.

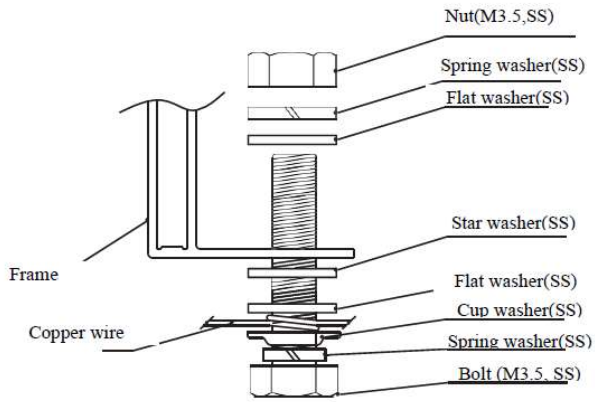

Figure 6

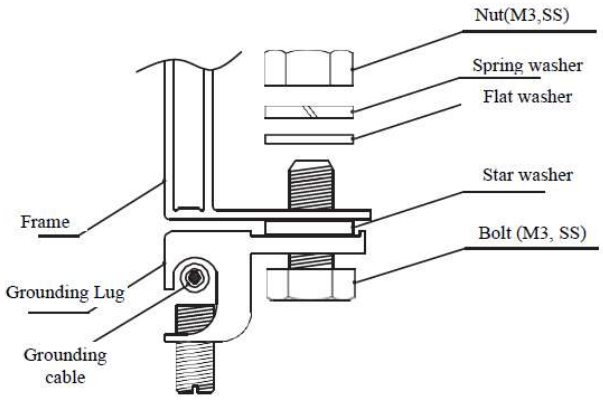

Figure 7

BYPASS DIODES AND BLOCK DIODES

In a system with two or more Modules connected in series, if part of a Module is shaded while the other part is exposed to the sun, a very high reverse current will go through the cells which have been partly or entirely covered and it will cause overheat on the cells, which may damage the Module. Using bypass diodes can protect Modules from this kind of risk. There are bypass diodes in junction boxes, which can reduce the effects of partial shadows. Do not privately disassemble the junction box to replace the diodes, even when the diodes are broken. This should be processed by the professionals.

In a system with batteries, if the controller doesn't have the function of backswing protection, block diodes installed between the battery and the Module can prevent the reverse current from damaging the Module.

MAINTENANCE

Normally, the Modules do not need repair. Follow the maintenance methods below to ensure the best performance of the Modules:

- In most conditions, the normal rainwater can keep the module glass clean. Clean the glass surfaces with wet soft sponge or cloth if necessary. Use mild non-abrasive cleaning agent to remove stubborn dirt.
- Do not try to clean a Module with broken glass or a perforated backsheet. It will cause serious electrical shock. Take a regular inspection on grounding, mechanical and electrical connections every 6 months. Make sure all the Module connectors are connected, clean and without damage or corrosion.
- When disassembling the connectors, must make sure all the components are working well; otherwise the connector's shall be replaced. Damage on the connector will cause electronic leakage. The tightening torque of the nut should be 1.5 N • m – 3 N •m.

- Use opaque material to completely cover the Modules during repair to avoid electric shock. When exposed to the sunshine, the Modules will produce high voltage. The repair work must be carried out by professionals.

Warning: Shut down the system before any electric repair. Improper maintenance may cause electric shock or fire.

Documents / Resources

	TW SOLAR TWMNH-66HD-620W Monocrystalline Bifacial Solar Module [pdf] Installation Guide TWMNH-66HD-620W, TWMNH-66HD-620W Monocrystalline Bifacial Solar Module, Monocrystalline Bifacial Solar Module, Bifacial Solar Module, Solar Module, Module

References

- User Manual

Manuals+, Privacy Policy

This website is an independent publication and is neither affiliated with nor endorsed by any of the trademark owners. The "Bluetooth®" word mark and logos are registered trademarks owned by Bluetooth SIG, Inc. The "Wi-Fi®" word mark and logos are registered trademarks owned by the Wi-Fi Alliance. Any use of these marks on this website does not imply any affiliation with or endorsement.